STAINLESS STEEL 90° ACTUATOR

SB AT454

Double acting & spring return · 90°

T.D.S. SB AT454-DM · issued 06/11

Air Torque SB AT454 pneumatic 90° actuator, offered double acting (D) or spring return (S). Full output torque, dimensions and ISO 5211 mounting data from Air Torque T.D.S. SB AT454-DM.

- Double acting (D) and spring return (S) versions
- 8 spring sets, S 05 to S 12
- ISO 5211 F10 + F12 flange
- Pressure connection G1/4", ports 2 and 4
- Drive shaft with integral top, 4x4 · ST / HT / LLT options

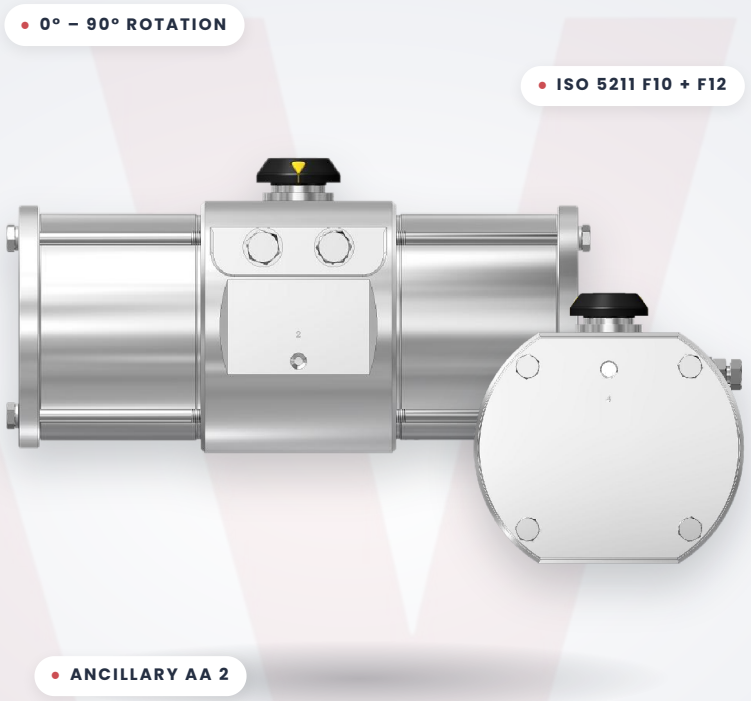

8 bar	522 Nm	34.6 kg	412 mm
MAX. PRESSURE	DA TORQUE AT 6 BAR	APPROX. WEIGHT, D	OVERALL LENGTH

Output torque.

NM AT SUPPLY PRESSURE

DOUBLE ACTING (D)

Pressure	2.5 bar	3 bar	3.5 bar	4 bar	4.2 bar	4.5 bar	5 bar	5.5 bar	6 bar	7 bar	8 bar	Approx. weight (kg)
D	**217**	**261**	**304**	**348**	**365**	**391**	**435**	**478**	**522**	**609**	**696**	**34.6**

SPRING RETURN (S)

air stroke 0° → 90° · spring stroke 90° → 0°

Spring set	2.5 bar		3 bar		3.5 bar		4 bar		4.2 bar		4.5 bar		5 bar		5.5 bar		6 bar		7 bar		8 bar		Spring stroke		Approx. weight (kg)
	Start	End	Start	End	Start	End	Start	End	Start	End	Start	End	Start	End	Start	End	Start	End	Start	End	Start	End	Start	End	
S 05	**135**	**88.6**	179	132	222	176	265	219	283	236	309	262	352	306									**129**	**82.4**	**35.9**
S 06	119	62.8	**162**	**106**	206	150	249	193	266	211	293	237	336	280	379	324							**155**	**99**	**36.2**
S 07			146	80.5	**189**	**124**	233	167	250	185	276	211	320	254	363	298	406	341					**180**	**115**	**36.4**
S 08					173	98.2	**216**	**142**	**233**	**159**	260	185	303	229	347	272	390	316	477	403			**206**	**132**	**36.7**
S 09							200	116	217	133	**243**	**159**	287	203	330	246	374	290	460	377	547	464	**232**	**148**	**36.9**
S 10											227	134	**270**	**177**	314	221	357	264	444	351	531	438	**258**	**165**	**37.2**
S 11													254	151	**297**	**195**	341	238	428	325	515	412	**283**	**181**	**37.5**
S 12															281	169	**324**	**213**	411	299	498	386	**309**	**198**	**37.7**

Highlighted figures are shown in bold on the Air Torque data sheet. Blank cells: no value given by Air Torque for that spring set and pressure.

DIMENSIONS

Drawing (mm)

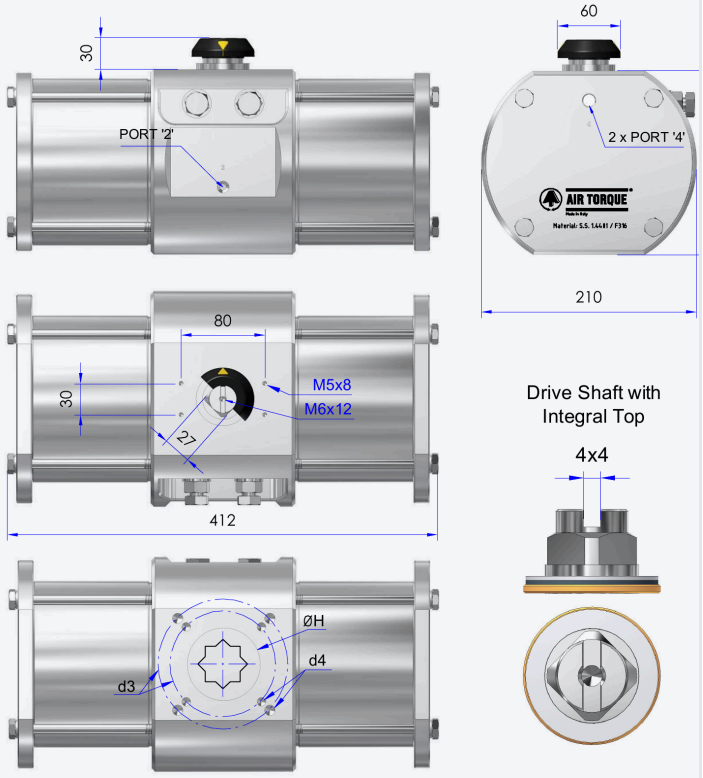

ISO 5211 FLANGE DIMENSIONS

	STD	
ISO 5211	**F10 + F12**	
Ø d2	70	NA
Ø d3	102	125
d4	M10x15	M12x18
Ø H	70	
Ch x l min.	DS27x29	
h min.	1.5	1.5
h1	3	NA

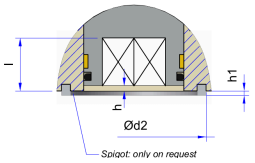

Spigot detail

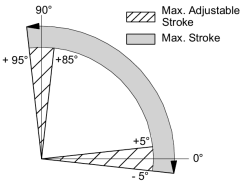

Rotation & stroke adjustment

Technical data.

SB AT454 · T.D.S. SB AT454-DM

Max. pressure	8 bar
Rotation (standard)	0° – 90°
Stroke adjustment	For 1° adjustment, 1/4 turn
Chamber Ø	145 mm
Air volume	Opening 2.41 L · closing 3.78 L
Moving time (A)	D: opening 1.2 s · closing 1.4 s S: opening 1.5 s · closing 1.8 s

Pressure connection	Ports 2 and 4 · G1/4"* **NPT (ANSI B1-20-1) threads available on request*
Ancillary attachment	AA 2
Temperature (B)	ST (standard): -40 to +80 °C HT (high temperature): -15 to +150 °C LLT (extreme low temperature): -55 to +80 °C
Operating medium	Free of dust and oil – see note below

Operating medium. The operating medium must be free of dust and oil. Maximum particle size 30 µm (ISO 8573 Part 1, Class 5). To prevent water condensation and/or solidification (ice when the actuator works below 0 °C), the operating medium must have a dew point equal to -20 °C or at least 10 °C below the ambient temperature (ISO 8573 Part 1, Class 3).

A) The moving times above were obtained under the following test conditions: (1) room temperature, (2) actuator stroke 90°, (3) solenoid valve with 4 mm orifice and flow capacity Qn 400 L/min, (4) inside pipe diameter 8 mm, (5) medium clean air, (6) air supply pressure 5.5 bar (79.75 psi), (7) actuator without external resistance load. In field applications where one or more of these parameters differ, the moving time will be different.

B) Every temperature range option requires proper components and lubricant. See Air Torque technical data sheet T.D.S. S00501E.

Data supplied by Air Torque S.p.A. and provided for reference only. Specifications may change without notice – please confirm details with Actuation Valve & Control before ordering.

Sizing an Air Torque actuator?

Talk to our UK team about torque sizing, spring sets, mounting kits and complete actuated valve packages.

actuation.co.uk